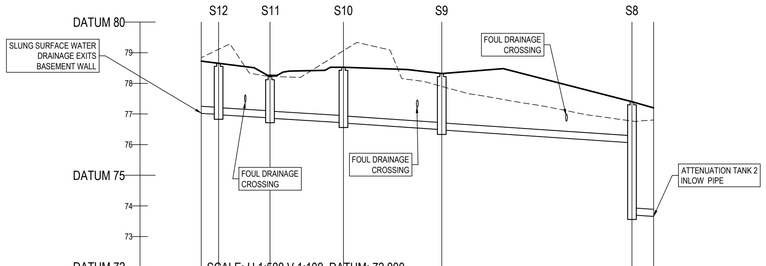

COVER LEVEL			78.655		78.219		78.525		78.320				77.400		
INVERT LEVEL		77.023 76.986	76.978	76.875	76.865	76.718	76.708	76.491	76.481		76.062	73.707 73.660			
DEPTH (m)			1.677		1.354		1.817		1.839				3.693		
DISTANCE (m)		2.83	8.39		11.99		16.04		31.05				3.54		
PIPE SLOPE		1:81	1:81		1:82		1:74		1:74				1:76		
PIPE SIZE		225mm	225mm		225mm		225mm		225mm				225mm		

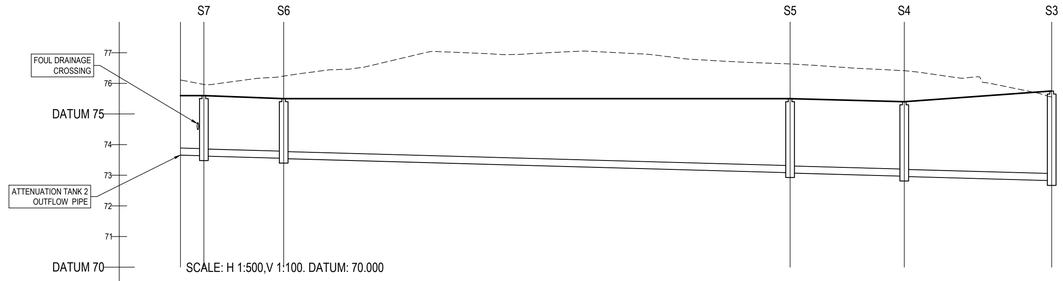

COVER LEVEL			75.600		75.500						75.500		75.400		75.750
INVERT LEVEL		73.660 73.659	73.629	73.556 73.546						73.086	73.076	72.972 72.962		72.628	
DEPTH (m)			1.971		1.954						2.424		2.438		2.932
DISTANCE (m)		3.82	13.03		82.67						18.64		24.07		
PIPE SLOPE		1:182	1:178		1:180						1:179		1:180		
PIPE SIZE		225mm	225mm		225mm						225mm		225mm		

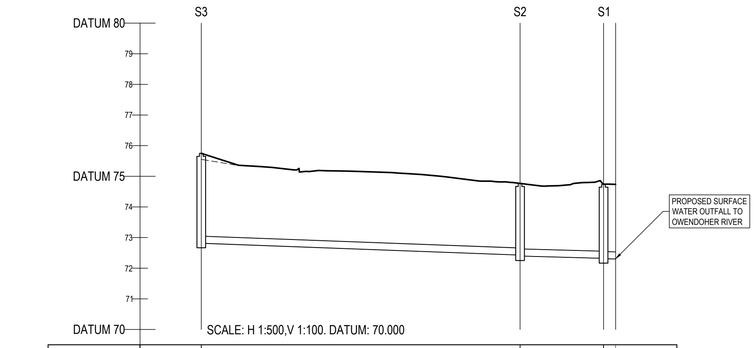

COVER LEVEL			75.750						74.768				74.744		
INVERT LEVEL		72.818						72.431	72.401			72.325 72.315	72.304		
DEPTH (m)			2.932						2.367				2.429		
DISTANCE (m)					52.03					13.63				1.97	
PIPE SLOPE					1:134					1:179				1:179	
PIPE SIZE					225mm					225mm				225mm	

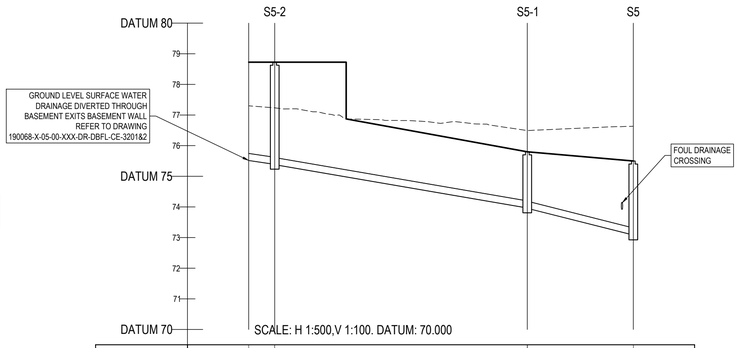

COVER LEVEL				78.725						76.800				75.500	
INVERT LEVEL			75.518 75.393	75.383					73.969	73.959			73.086		
DEPTH (m)				3.342						1.841				2.424	
DISTANCE (m)			4.24		41.22					17.31					
PIPE SLOPE			1:34		1:29					1:20					
PIPE SIZE			225mm		225mm					225mm					

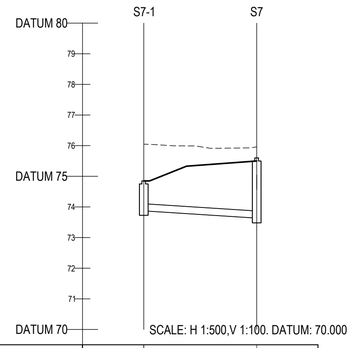

COVER LEVEL				74.850						75.600					
INVERT LEVEL				73.875						73.639					
DEPTH (m)				0.975						1.971					
DISTANCE (m)					18.44										
PIPE SLOPE					1:78										
PIPE SIZE					225mm										

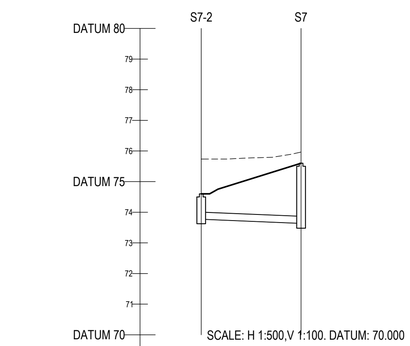

COVER LEVEL				74.600						75.600					
INVERT LEVEL				73.775						73.639					
DEPTH (m)				0.825						1.971					
DISTANCE (m)					16.30										
PIPE SLOPE					1:120										
PIPE SIZE					225mm										

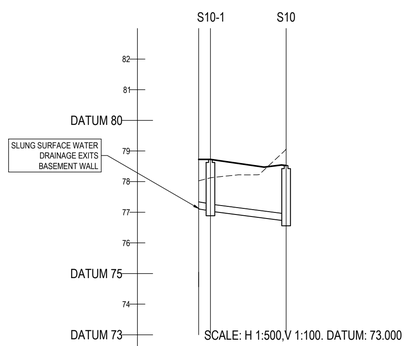

COVER LEVEL					78.725					78.525					
INVERT LEVEL			77.110 77.046	77.036				76.718							
DEPTH (m)				1.689					1.817						
DISTANCE (m)			1.92		12.35										
PIPE SLOPE			1:30		1:39										
PIPE SIZE			225mm		225mm										

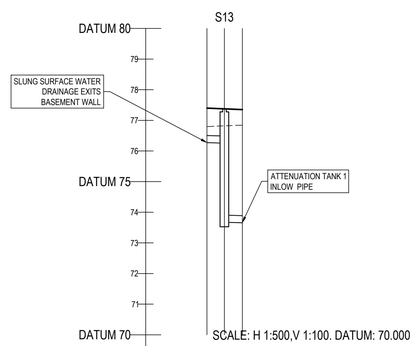

COVER LEVEL							77.375								
INVERT LEVEL					76.275 76.245		73.676 73.660								
DEPTH (m)							3.699								
DISTANCE (m)					2.85		2.93								
PIPE SLOPE					1:178		1:183								
PIPE SIZE					225mm		225mm								

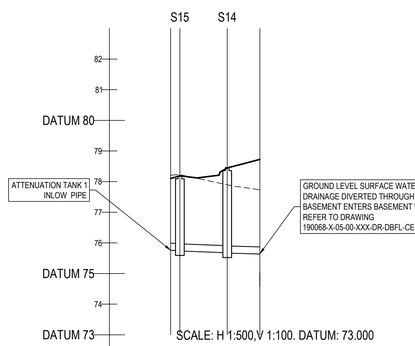

COVER LEVEL						78.190			78.457						
INVERT LEVEL					76.760 76.730	75.739		75.680	75.670	75.640					
DEPTH (m)						2.451			2.787						
DISTANCE (m)					1.50		7.72			5.34					
PIPE SLOPE					1:137		1:131			1:178					
PIPE SIZE					225mm		225mm			225mm					

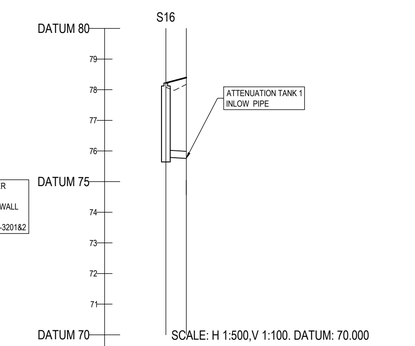

COVER LEVEL						78.221									
INVERT LEVEL						75.801 75.771									
DEPTH (m)						2.428									
DISTANCE (m)						3.35									
PIPE SLOPE						1:84									
PIPE SIZE						225mm									

ON ORIGINAL

0 5 10 20 30 40 50mm

© COPYRIGHT OF THIS DRAWING IS RESERVED BY DBFL CONSULTING ENGINEERS. NO PART SHALL BE REPRODUCED OR TRANSMITTED WITHOUT THEIR WRITTEN PERMISSION.

NO CHANGES OF WHATSOEVER NATURE ARE TO BE MADE TO ANY DETAILS SET OUT OR CONTAINED IN ANY DBFL SPECIFICATIONS OR DRAWINGS UNLESS THE EXPRESS CONSENT HAS BEEN OBTAINED IN ADVANCE, IN WRITING, FROM DBFL

NOTES:

1. ALL DRAWINGS TO BE CHECKED BY CONTRACTOR ON SITE AND ENGINEER INFORMED OF DISCREPANCIES BEFORE WORK COMMENCES
2. ALL LEVELS ARE IN METRES AND ARE RELATED TO ORDNANCE DATUM
3. CONTRACTOR SHALL SATISFY HIMSELF AS TO THE ACCURACY OF PAVEMENT LEVELS ON SITE PRIOR TO COMMENCEMENT OF WORKS ON SITE
4. ALL WORKS TO BE CONSTRUCTED IN ACCORDANCE WITH THE NRA SPECIFICATION FOR ROAD WORKS UNLESS NOTED OTHERWISE
5. THIS DRAWING IS FOR PLANNING PURPOSES ONLY
6. MANHOLE COVER LEVELS ARE TO CONFORM WITH FINISHED ROAD AND PATH LEVELS
7. WHERE COVER TO PIPE IS LESS THAN 1200mm (ROAD/PATH/VERGE) OR 900mm (OPEN SPACE) SURROUND PIPE IN MINIMUM 150mm CONCRETE

KEY

EXISTING GROUND PROFILE
PROPOSED GROUND PROFILE

rev	date	description	by	chkd.
1	29-03-23	ISSUED FOR PLANNING	BS	NJF
0	30-09-22	ISSUED FOR STAGE 2 PRE-PLANNING	BS	NJF

STATUS CODES

purpose	acceptance
P3 - PLANNING PERMISSION	S - ISSUED

DBFL Consulting Engineers
Civil, Structural & Transportation Engineering
www.dbfl.ie

DUBLIN OFFICE: Ormond House, Upper Ormond Quay, Dublin 7, D07 W704
PHONE +353 1 400 4000

CORK OFFICE: 14 South Mall, Cork, T12 CT91
PHONE +353 21 2024538

WATERFORD OFFICE: Suite 8b The Atrium, Maritana Gate, Canada Street, Waterford, X91 W028
PHONE +353 51 309 500

project ref.

SITE AT TAYLORS LANE,
BALLYBODEN, DUBLIN 16

drawing title

SURFACE WATER DRAINAGE
LONGITUDINAL SECTIONS SHEET 1

client

SHANNON HOMES DUBLIN UNLIMITED COMPANY

designed by	author	scale	sheet size
GK	BS	AS SHOWN	A1

drawing no.	revision
190068-X-91-Z00-XXX-DR-DBFL-CE-3401	1